uniden®

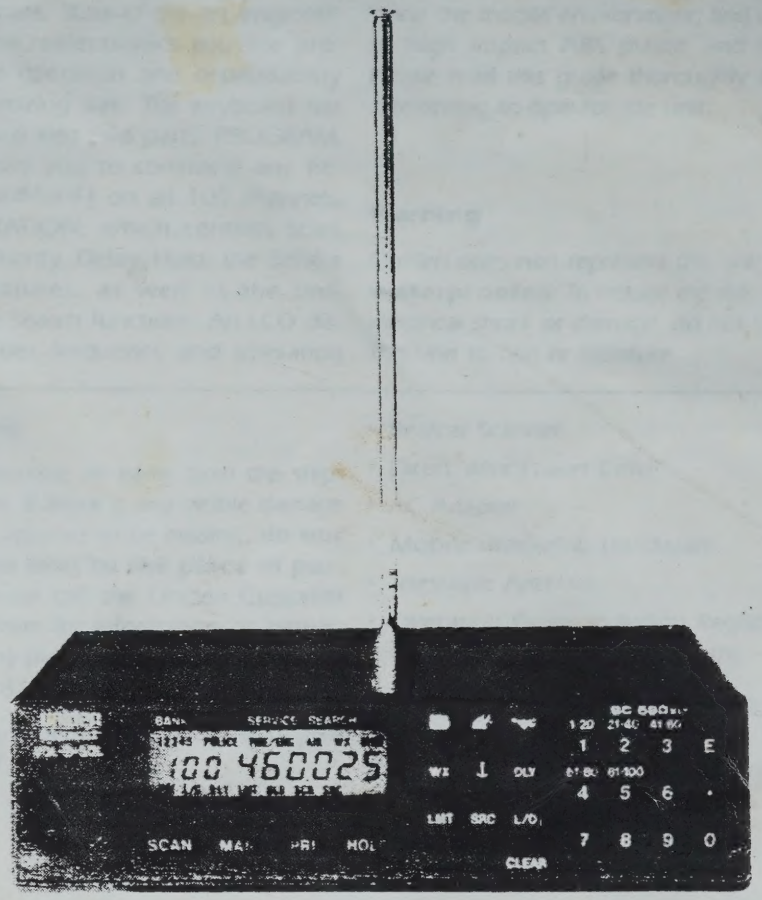

Bearcat

BC 580XLT
100 Channel
Mobile/Base Scanner

INTRODUCTION

Welcome to the exciting world of mobile radio scanners. State-of-the-art engineering and microelectronics provide programmable operation and dependability while minimizing size. The keyboard has been divided into two parts: PROGRAM, which allows you to command any frequency (UHF/VHF) on all 100 channels; and OPERATION, which controls Scan, Lockout, Priority, Delay, Hold, the Service Search features, as well as the programmable search functions. An LCD display provides frequency and operation information. The case is designed to withstand the mobile environment, and is built of high impact ABS plastic and metal. Please read this guide thoroughly before attempting to operate the unit.

Warning

Uniden does **not** represent this unit to be **waterproofed**. To reduce the risk of fire, electrical shock or damage, do not expose this unit to rain or moisture.

Unpacking

Carefully remove all items from the shipping carton. If there is any visible damage or an item appears to be missing, **do not return the unit to the place of purchase**. Please call the Uniden Customer Service Center for information or instructions on any problem you may have: (317) 842-2483 8am-5pm EST, Monday-Friday.

The following items are included with your BC 580XLT

- Bearcat Scanner
- Direct Wire Power Cord
- AC Adapter
- Mobile Bracket & Hardware
- Telescopic Antenna
- Operating Guide including Registration Card (cut out, fill in, and return)

Please keep the shipping carton and packing materials. This carton serves as an excellent method to transport the scanner.

INSTALLATION

Mobile Installation

Plan the location of the radio bracket before starting the installation. Select a location that is convenient for operation and does not interfere with the driver or passenger in the vehicle. The bracket should be securely fastened to a solid surface using the self tapping screws provided. Mount the scanner to the bracket with the thumb screws and adjust the angle of the radio.

Mobile Antenna

In the mobile application the Bearcat 580XLT will require an external vehicle antenna. Use a mobile antenna designed for multi-band coverage. For maximum effectiveness, the external antenna should be fed with low loss 50 ohm coaxial such as RG58 foam. Remember, you have purchased the finest mobile scanner available, so don't compromise its performance with an inferior antenna.

Ideally, the antenna should be mounted directly in the center of the vehicle's roof. The radiation and reception pattern of a vehicular antenna always conforms to the ground plane (metal shape) located below the antenna. A roof mounted antenna provides virtually an omnidirectional pattern. If the antenna was mounted on the left rear fender, the best reception would occur from the right front fender of the vehicle, with greatly reduced reception from the left rear. Avoid mounting the antenna on a front fender, as ignition noise can limit reception.

Connecting the Power

The BC 580XLT is designed to be used in any vehicle which has a 13.8-volt DC negative-ground electrical system. If you cannot determine the polarity of your vehicle, consult your vehicle dealer for information.

Note: The use of this radio in a motor vehicle may be regulated or require a permit in certain states or certain cities.

The BC 580XLT should be connected directly to the fuse block or battery of your car. Connect the power cord to the back of the radio in the jack marked "DC 13.8V".

Desktop Installation

The BC 580XLT has a unique design feature that allows the unit to be used as an in-home scanner. The fold-out foot sets the unit at a proper angle for desk or table-top use. Simply swing the foot out until it locks in its upright position.

Note: Please be sure that the foot is folded out completely in order to avoid accidental damage to the unit.

Telescopic Antenna

The BC 580XLT includes a telescopic antenna for use in desktop installations. Insert the antenna into the opening on the rear apron of the radio, and fully extend it. Under normal conditions this antenna should provide excellent reception. However, factors such as location within your home, and proximity to electrical appliances may determine reception quality. For weak signal reception or electrically noisy locations, an external antenna may be helpful.

AC Adapter

The BC 580XLT can be powered by the AC Adapter included with the scanner which converts standard household current to 13.8V DC. Plug the small connector of the AC Adapter into the jack in the back of the radio marked DC 13.8V. Plug the other end into any standard 120 V AC household outlet.

Note: Please be sure to use only model AD-580U AC Adapter, as higher voltage, or reverse polarity may damage your unit.

Memory Backup

Frequencies maintained in the BC 580XLT memory are protected from loss in the event of electrical power interruption by two A-A size batteries. These batteries should be replaced every 6 months. Additionally the BC 580XLT has a built in capacitor which protects the memory for 30 minutes when you are replacing the memory batteries (alkaline batteries recommended).

Installing the Batteries

The battery carriage is located on the rear apron of the unit. Press the latches toward each other, and slide the carriage out. Install two (2) A-A batteries, checking to insure that proper polarity is maintained. Slide the battery carriage back into place until the latches snap into position.

INSTALLATION

CONTROLS AND FUNCTIONS

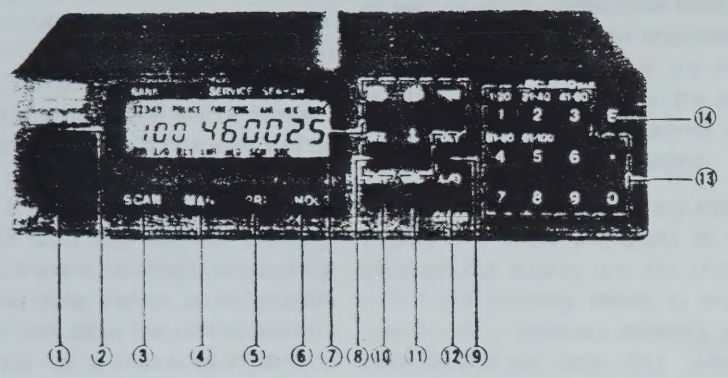

1. **On/Off, Volume** - Turns the unit on or off, and controls the audio output level.

2. **Squelch** - Eliminates the annoying "rushing" sound that is present between transmissions when no signal is being received. Proper adjustment of this control keeps the receiver quiet and allows scanning until a signal is received.

3. **Scan** - Press to start scanning all frequencies programmed into memory that are not locked out.

4. **Manual** - Press to stop scanning. Press again to manually step to the next channel. Press the channel number and then press the manual key to go directly to that channel.

5. **Priority** - The priority key samples channel 1 every two seconds regardless of other operational settings.

6. **Hold** - Press to stop and hold the search function on the current frequency. Press again to manually step up to the preceding frequency.

7. **Service Search** - Press any of the 5 service search keys to instantly search Police, Fire/Emergency, Aircraft, Marine bands, or Weather Search.

8. **Weather Search** - The WX key searches all seven NOAA weather frequencies until it locks on the one in your area.

CONTROLS AND FUNCTIONS

9. **Delay** - The delay key provides a 2 second delay on any channel to receive a reply transmission on the same frequency before resuming search or scan. Delay is retained in memory.

10. **Limit** - Enter the low and high limits of the search range. Press to manually step the search frequency down.

11. **Search** - Press to search for new active frequencies within preset ranges of any band.

12. **Lockout/Clear** - Press to lockout the reception of frequencies on selected channels during scanning. Lockout is retained in memory. Press again to deselect lockout. Pressing the lockout for 2.5 seconds will clear all the locked out frequencies.

    The Lockout function will also work in all Service Search modes except WX and Aircraft. The Lockout func tion will not work in regular banc search mode.

13. **Numeric Keypad** - ("0-9" and ".") Used to program all frequencies int memory and for direct channel access During the scan mode these keys ar utilized to select or deselect any of th 5 memory banks.

14. **Enter** - The "E" key is used to ente frequencies into the scannin memory.

15. **Memory Lock** - This unique feature is used to lock the keypad to preven accidental entries and is located o the back panel.

16. **External Speaker** - The externa speaker jack allows you to use ar alternate speaker in case of a higl noise environment. Use Unider model ESP 25 external speaker fc best results.

"Installing Batteries"

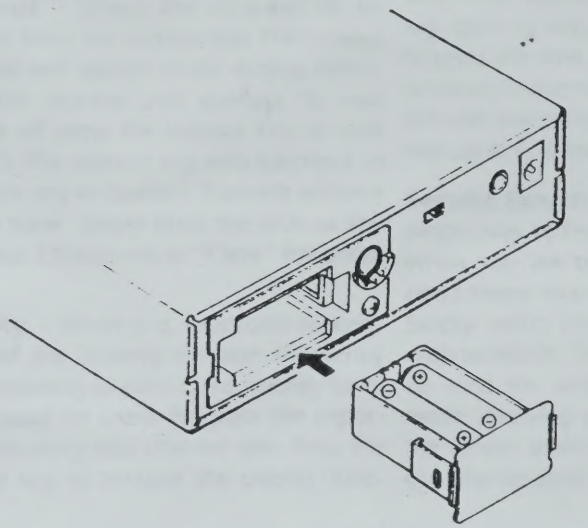

OPERATION

The BC 580XLT has 100 memory channels, each of which can be programmed to store one frequency. The channels are divided into 5-20 channel banks, useful for storing similar frequencies in order to maintain faster scanning cycles. When scan is pressed, each of the programmed frequencies within a selected bank will be sampled for a transmission (locked channels will be skipped) at the rate of about 15 channels per second. If an active frequency is found the unit will stop and monitor that frequency until there is no longer any activity. A two second delay can be added to each channel and will allow the unit to monitor the frequency for a return or continued transmission. If, after two seconds, the frequency remains inactive, the scanning cycle will resume.

When the unit is first turned on, each channel will contain "000.000". When new frequencies are programmed the old will be erased. If an invalid frequency is entered, "Error" will be displayed and the old frequency will return. "E loc" will also be displayed if memory lock is on.

To operate the scanner make sure that the power is correctly connected to the unit. Turn the volume control on and adjust the desired level. Adjust the squelch by turning the knob fully clockwise until a rushing sound is heard. Turn the knob back until the receiver is silent. After the channels have been programmed, operation is simple. Press the scan key to scan all the channels, press the manual key to stop the scanning, and manually step through the channels.

Note: The unit must be in the scan mode to select or deselect a channel bank.

LCD Display

The BC 580XLT has a backlit display which shows the current channel and frequency as well as other operational modes. When the unit is scanning, the channel number will rapidly advance while the frequency display will go blank. When the scanner is stopped the current channel and frequency will again be displayed.

When frequencies are programmed the display will show the digits as they are entered. The display will also show "PRI" when the priority mode is on, "L/O" whenever a channel appears that has been locked out, and "DLY" whenever a channel has been programmed for delay. In the upper left hand corner of the display the numbers 1-5 will be present. These are the bank indicator numbers. These are selected or deselected during the scan sequence by the use of the numeric pad. During the service search sequence the word "POLICE" will be displayed if that service has been selected. Similarly "FIRE/EMG" for fire and emergency, "AIR" for aircraft, "WX" for weather, and "MRE" for marine band service searches will be displayed when selected.

Programming

To program a frequency into a channel, press the digits of that frequency including the decimal point and then press the enter key. If an invalid frequency is entered, the display will show "Error." To change a frequency enter the new one and the old one will be erased.

OPERATION

To program 162.550 into channel 2:

Press 2 MAN

Press 1 6 2 . 5 5 0 E

To program 471.2375 into channel 7:

Press 7 MAN

Press 4 7 1 . 2 3 7 5 E

Features

The following is a brief description of the operational features of the BC 580XLT.

Manual Channel Selection - To manually select a channel, press the manual key repeatedly until the desired channel number appears in the display.

or

Press the channel number you wish to access, then press the manual key. The scanner will automatically advance to the desired channel regardless of the bank status.

Lockout - Select the channel to be skipped. Press the lockout key. The lockout indicator will appear in the display whenever that channel also appears. To take lockout off press the lockout key on that channel. The lockout key also functions to eliminate any locked out channels within a certain bank. Simply press the lockout key for about 2.5 seconds to "Clear" the entire bank.

Priority - When it is important to keep track of the activity on one frequency while listening to others, the priority function should be used. Program the important frequency into channel one. Press the priority key to activate the priority function. Every 2 seconds the unit will check channel one for activity (the priority indicator will appear in the display). If a transmission is found the unit will monitor that channel. If no signal is found, the unit will return to the previous channel and function. Press the priority key again to turn off the priority function. When priority is on, the audio may be periodically interrupted.

Search - Use the search mode to look for new active frequencies within the bands of your scanner.

Enter the lower limit frequency on the keypad and press the limit key.

Enter the higher limit frequency and press the limit key again.

These two frequencies set the range that the unit will search. Press the search key to start searching. If an active frequency is found the scanner will stop to monitor the signal. Press the hold key to hold the search on this frequency. Press the hold key again to step up to the next frequency or press the limit key to step down to the previous frequency. When the signal stops the unit will continue searching. Press the manual key to leave the search mode.

Service Search - This unique feature is a simple way to find new active frequencies when you are travelling or anytime you don't know exact frequency bandwidths. Simply select the particular service you wish to search. The hold and limit keys can be used the same way as in the search mode, allowing you to step down or up the service search band manually. Lockout can also be used.

HELPFUL HINTS

The BC 580XLT is a high quality electronic radio receiver. The following hints should help you understand and enjoy your unit.

1. Make sure the unit is turned off before disconnecting the power. You may want to record the programmed frequencies before power is interrupted in case memory is lost.
2. If memory is lost, simply reprogram each channel. Memory loss will be indicated by unfamiliar frequencies or "000.000" in each channel.
3. If strong interference or electrical noise is received, you may need to relocate your scanner. A higher elevation such as the second floor may provide better reception.
4. Whenever the keypad is used it is important to press firmly on the center of each key.
5. Do not use the scanner in high moisture environment such as the kitchen or the bathroom.
6. Clean the outside of the cabinet with a mild detergent. Do not use abrasive cleansers or solvents. Be careful not to rub LCD window area.
7. There are no user serviceable parts inside with the exception of the memory backup batteries. Do not attempt any repairs.

Trouble Shooting

If your BC 580XLT is not performing up to your expectations, try the steps listed below.

TROUBLE	CHECK
1. Scanner is not working properly.	A. Check the power connections. B. Check the volume and squelch. C. Make sure programming is correct.
2. Signal is weak or distorted.	A. Check antenna connection. B. Check proper frequencies. C. Make sure frequency is active.
3. Improper reception.	A. Check proper frequencies. B. Reposition radio. C. Check antenna connection.
4. Scan won't stop.	A. Check squelch adjustment. B. Check proper frequencies. C. Check antenna connection. D. Check lockout.
5. Incomplete reception.	A. Fringe area of reception. B. Check squelch adjustment.
6. Unit won't program.	A. Check memory lock switch.
7. Priority won't work.	A. Check squelch adjustment. B. Improper frequency in Channel 1.

FREQUENCY ALLOCATIONS

Because of the short-range nature of VHF and UHF FM communications, frequencies allocated to services in one geographical location will not be heard more than 25-50 miles distance (an exception is "skip" when signals bounce back to earth from the ionosphere). For this reason a separate frequency directory must be compiled for each local monitoring area.

Most standard frequency separations and classifications are regulated in the United States by the FCC. Block allocations and even some discrete frequencies covered by your scanner are shown below. These frequencies are not necessarily active in your area. Uniden provides an eastern or western regional directory and a local listing of active frequencies. See the Optional Accessories section for more information.

Abbreviations

The following is a list of abbreviations used to identify the organizations in the frequency allocations.

Police	P.D.
State Police	St. P.D.
Fire Department	F.D.
Special Emergency	Sp. Emer.
Highway Maintenance	Hwy.
Forestry-Conservation	Fors. Cons.
Government	Govt.
Local Government	L. Govt.
Business Radio	Bus.
Manufacturers	Mfg.
Broadcast Remote	BC. R
Mobile Telephone	Mob. Tel.
Radio Paging	Page.
Special Industrial	Sp. Ind.
Motion Picture	Mot. P.
Power Utilities	Power
Petroleum	Pet.
Forest Products	For. Prod.
Railroad	R. R.
Automobile Emergency	Auto Emer.
Red Cross	
U.S. Weather Bureau	U.S.W.B
U.S. Coastal & Geodetic Survey	U.S.C.G.S.
National Parks	Nat. Pk.
Indian Affairs	
Bureau of Reclamation	Bur. Recl.
Department of Agriculture & Forestry	Agr. & For.
Land Transportation	Land Tr.
Amateur Radio	HAM
Aviation	Aero

29-54 MHz BAND

29.00-29.70	10HAM
29.70-29.80	For. Prod.
29.80-30.00	Aero
30.01-30.56	Govt.
30.56-30.62	Sp. Ind.
30.66-31.24	Ind. (Pet., Fors. Cons. Bus., For. Prod.)
31.26-31.98	Sp. Ind., Fors. Cons.
32.00-33.00	Govt.
33.02-33.16	Hwy., Sp. Emer., Bus.
33.18-33.38	Pet.
33.42-33.98	F.D.
34.00-35.00	Govt.
35.02-35.18	Bus.
35.22-35.66	Mob. Tel. & Page
35.70-35.73	Bus.
35.74-35.98	Sp. Ind. & Bus.
36.00-37.00	Govt.
37.02-37.44	F.D., P.D. & L. Govt.
37.45-37.86	Power
37.90-37.98	Hwy. & Sp. Emer.
38.00-39.00	Govt.
39.02-39.98	P.D., L. Govt.
40.00-42.00	Govt.
42.02-42.94	St. P.D.
42.96-43.18	Sp. Ind. & Bus.
43.22-43.68	Mob. Tel., Page
43.70-44.60	Trucks, Bus.
44.62-45.06	St. P.D., Fors. Cons.
45.08-45.66	P.D.
45.68-46.04	P.D., Hwy., Sp. Emer.
46.06-46.50	F.D.
46.52-46.58	P.D., L. Govt.
46.60-47.00	Govt.
47.02-47.40	St. Hwy.
47.42-	Red Cross
47.44-47.68	Sp. Ind., Sp. Emer.
47.70-48.54	Power
48.56-49.58	L. Govt., Pet.
49.60-50.00	Govt.
50.00-54.00	HAM

FREQUENCY ALLOCATIONS

118-174 MHz BAND

118.000-135.975	Aero
136.000-144.000	Govt.
144.000-148.000	HAM
148.010	MARS
148.150	CAP
148.155-148.250	MIL
148.290-150.750	USN
150.815-150.995	Bus.
151.010-151.130	Hwy.
151.145-151.475	Fors. Cons.
151.505-151.595	Sp. Ind.
151.625-151.955	Bus.
151.985-152.240	Mob. Tel. (RCC)
152.270-152.450	Taxi
152.480-152.840	Mob. Tel & Page
152.870-153.020	Sp. Ind., Mot. P.
153.050-153.440	Pet., For. Prod.
153.470-153.710	Power
153.740-154.115	F.D., L. Govt.
154.130-154.445	F.D.
154.450-154.600	Sp. Ind.; Pet., Bus.
154.655-155.145	P.D., L. Govt., St. P.D.
155.160-155.400	Sp. Emer., P.D.
156.045-156.240	L. Govt., Hwy., P.D.
156.275-157.425	Marine
157.456-157.500	Auto Emer.
157.530-157.710	Taxi
157.740-158.100	Mob. Tel., & Page
158.130-158.460	Power, For. Prod., Pet.
158.490-158.700	Mob. Tel. (RCC)
158.730-158.970	P.D., L. Govt.
158.985-159.210	P.D., Hwy.
159.225-159.465	Fors. Cons.
159.510-160.200	Trucks
160.215-161.565	R.R.
161.600-162.000	Marine
162.026-162.175	Bur. Recl.
162.400	U.S.W.B.
162.475	U.S.W.B.
162.550	U.S.W.B.
163.125	Indian Affairs
163.175	Bur. Recl.
163.275	U.S.W.B.
163.388-163.538	MIL
163.825-163.975	Govt.
164.025-164.075	U.S.C.G.S.
164.175-165.188	Fur. Recl., Nat. Pk., Govt., Agr. & For.
169.300	F.A.A.
169.450-169.725	Nat. Pk., Ind., Data
170.150	F.D., BC. R.
170.200-170.220	U.S.C.G.S.
170.225-170.325	Ind., Land Tr.
170.425-170.575	Fors. Cons.
170.975-171.250	Govt., Sp. Ind. & Land Tr.
171.388-172.725	Bur. Recl., Fors. Cons., Ind., Dept. Ag. & For., Govt.
172.775	Nat. Pk.
173.025	U.S.W.B.
173.075	U.S.C.G.S.
173.204-173.375	Press Relay, Mot. P., Pet., Bur. Recl.

406-512 MHz BAND

406.000-420.000	Govt.
420.000-450.000	HAM
450.050-450.950	Remote Br.
451.000-451.150	Util.
451.175-451.750	For. Prod., Pet., Power, Tel. Maint.
451.775-451.975	Spec. Ind.
452.000-452.500	Taxi, Motor Carrier & R.R.
452.525-452.600	Auto Club
452.625-452.975	BC. R., Motor Carrier & R.R.
453.000-453.975	L. Govt., P.D., & F.D.
454.000-454.975	Mob. Tel. & Page
455.000-455.975	Remote Br.
456.000-458.975	P.D., F.D. Ind., Land Tr.
459.000-459.975	Mob. Tel., Page, & Domestic Public
460.000-460.625	P.D., F.D.
460.650-462.175	Bus.
462.000-462.450	Taxi
462.550-462.725	C.B.
462.750-462.975	Bus.
463.000-463.175	Medical
463.200-464.975	Bus.

FREQUENCY ALLOCATIONS

465.000-467.500 ..... P.D., F.D., Sp. Ind., & Land Tr.
467.5375-467.7375 ..... C.B.
467.7375-467.925 ..... Pub. Safety, Ind., & Land Tr.

In some large metropolitan areas, 1 or 2 channels of the "TV Band" (470 MHz to 512MHz) are used for communication purposes. Each TV station (channels 14 through 20) utilizes 6 MHz:

470-476 TV	Channel 14
476-482 TV	Channel 15
482-488 TV	Channel 16
488-494 TV	Channel 17
494-500 TV	Channel 18
500-506 TV	Channel 19
506-512 TV	Channel 20

Where these frequencies are assigned for communication purposes, in lieu of a TV station, the 6 MHz segment is allocated as shown here for channel 14 (470-476 MHz).

470.0125-470.2875 ..... Domestic Public (Base, Mob.)
470.3125-471.1375 ..... Public Safety
471.1625-471.2875 ..... Reserve Pool A
471.3125-471.4125 ..... Pwr., Tel. Maint.
471.4375-471.6375 ..... P.D., Spec. Ind.
471.6625-471.7875 ..... Reserve Pool B
471.8125-472.3375 ..... Bus.
472.3625-472.4375 ..... Taxi
472.4675-472.7875 ..... R.R., Motor Carrier, Auto Emer.
472.8125-472.9875 ..... Pet., For. Prod., Mfg.
473.0125-473.2875 ..... Domestic Public
473.3125-474.1375 ..... Public Safety
474.1625-474.2875 ..... Reserve Pool A
474.3125-474.4125 ..... Power, Tel., Maint.
474.4375-474.6375 ..... Spec. Ind. (Mobile)
474.6625-474.7875 ..... Reserve Pool B
474.8125-475.3375 ..... Bus.
475.3625-475.4375 ..... Taxi
475.4625-475.4875 ..... R.R., Motor Carrier, Auto Emer.
475.8125-475.9875 ..... Pet., For. Prod., Mfg.

The same allocation pattern is repeated for each of the TV channels 14 through 20. For example, if channel 17 is assigned for communications in our area, "Taxi" would be 490.3625 to 490.4375 and 493.3625 to 493.4375 (corresponding to 472.3625 to 472.4375 and 475.3625 to 475.4375 above). Note that in the example, we added three TV channels (18 MHz to the channel 14 frequencies).

SPECIFICATIONS

Band Coverage:	11 Bands	
Frequency Range:	10 Meter "Ham"	29.0-29.7 MHz
	Low Band	29.7-50.0 MHz
	6 Meter "Ham"	50.0-54.0 MHz
	Aircraft	118-136 MHz
	Military Land Mobile	136-144 MHz
	2 Meter "Ham"	144-148 MHz
	High Band	148-174 MHz
	Federal Government	406-420 MHz
	70cm "Ham"	420-450 MHz
	UHF Band	450-470 MHz
	"T" Band	470-512 MHz
Channels:	100 Channels (5-20 channel banks)	
Scan Speed	15 channels per second	
Display:	Illuminated Liquid Crystal	
Power Requirement:	13.8 VDC (vehicle battery or AC Adapter) 2 A-A size batteries (not included) for 6 month memory backup.	
Sensitivity	29-54 & 136-174 MHz = 0.4 microvolts	
(nominal)	118-136 MHz = 0.8 microvolts (60%AM)	
(12dB SINAD)	406-512 MHz = 0.5 microvolts	
Selectivity:	−55dB @ ± 25 KHz	
Audio Output (Nominal):	2.5 Watts at 10% T.H.D.	
Antenna:	telescopic antenna included	
Connectors:	antenna, external speaker, DC power	
Size:	6 5/16" W × 1 5/8" H × 7 3/8" D	
Weight:	2 lb. 5 oz.	

Certified in accordance with FCC rules and regulations part 15 as of date of manufacture.

Specifications are typical and subject to change without notice.

Birdies

All radios are subject to receiving undesired signals. If the BC 580XLT stops during scan mode and no sound is heard, it may be receiving a "Birdie." Birdies are internally generated signals inherent in the electronics of the receiver. Press the Scan key to continue scanning.

jukka@cs.tut.fi
kvarka@ntcclu.ntc.nokia
jtb/ttu@ntcclu.ntc.nokia.com

mail -f mbox